The information contained in this drawing is the sole property of CWS Coil Winding Specialist.
Any reproduction in part or whole without written permission of CWS Coil Winding Specialist is prohibited.

| REVISION HISTORY | | | | | | |
|---|---|---|---|---|---|---|
| REV | ECN | DESCRIPTION | SIGN & DATE | | | |
| | | | BY | DATE | CHK | DATE |
| A | | PRODUCTION RELEASE | RPR | 5/24/04 | JLAU | 5/24/04 |

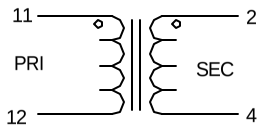


*SCHEMATIC*

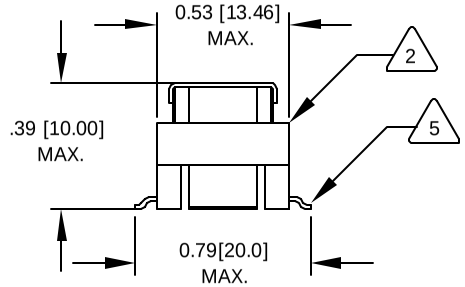


*FRONT VIEW*

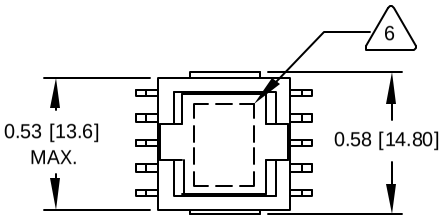


*TOP VIEW*

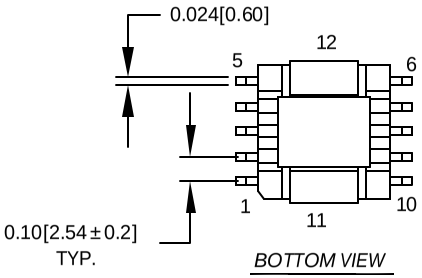


*BOTTOM VIEW*

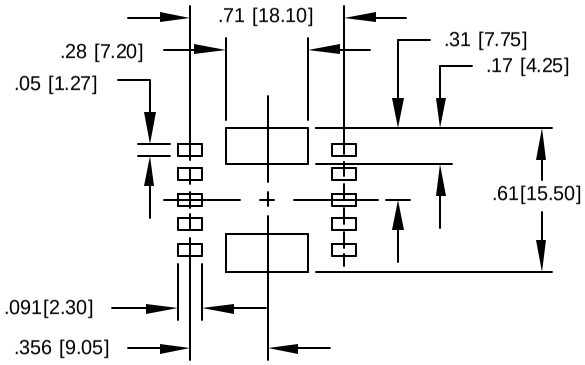


*MOUNTING HOLES PATTERN*

6 WHERE SHOWN
MARK PART NUMBER AND REVISION

5 REMOVE INSULATION, SOLDERED TO LEADS

4 CONSTRUCTION: ENCAPSULATED USING BOBBIN.

FREQUENCY RANGE 50 KHz TO 100 KHz
OPERATING TEMP. = - 25 °C TO 125 °C
HI-POT PRIMARY TO SECONDARY = 500 Vrms
PRIMARY CURRENT = 35 A MAX.
SECONDARY DCR = 0.34 OHMS MAX
SECONDARY INDUCTANCE@ 10 KHz, 0.1 V = 0.50 mH MIN
TURNS RATIO PRI:SEC = 1:30

3 SPECIFICATIONS @ 25 °C

WIRE: UL RECOGNIZED 130 °C RATED MAGNET WIRE
CWS BYTEMARK OR OTHER APPROVED PART
2 CORE: FERRITE TOROID

BOBBIN RATING CLASS B (130 °C ) REQUIRED
1 MATERIAL: UL RECOGNIZED 94V-0 FOR FLAMMABILITY

NOTES: UNLESS OTHERWISE SPECIFIED. CURRENT SENSOR.

UNIT: INCHES [MM]

| QTY | CODE IDENT | MFG. P/N | DESCRIPTION | ITEM NO. |
|---|---|---|---|---|

PARTS LIST

| | | |
|---|---|---|
| AUTOCAD | X | |
| SOLIDWORKS | | |
| SIGN | | DATE |
| DRAWN | RPR | 5/23/04 |
| CHECKED | JLAU | 5/23/04 |
| ENGR. | KSUM | 5/23/04 |
| APPR. | JLAU | 5/23/04 |

UNLESS OTHERWISE SPECIFIED
DIMENSIONING AND TOLERANCE PER ANSI Y14.5M
ALL DIMENSIONS ARE IN INCHES AND [MILIMETERS].
TOLERANCE INCHES: .XXX=±.010 .XX=±.020 ∠=±0°30'
TOLERANCE METRICS: .XXX=±.254 .XX=±.51 ∠=±0°30'
ANGLE PROJECTION
DO NOT SCALE DRAWING

COILWS COM, INC
www.coilws.com
CWS Coil Winding Specialist.
1510 E. Edinger Ave.
Unit B. Santa Ana, CA. 92705

TITLE: Current Sense Transformer

SIZE B | DWG. NO. 72-401 | REV A

SCALE 2=1 | SHEET 1 OF 1



CAD-FILE: